Luminaire Schedule							
Symbol	Qty	Label	Arrangement	Description	LLF	Luminaire Lumens	Luminaire Watts
	4	A	Single	MRB-LED-30L-ACR-S-UNV-DIM-30-XX-XX-H-50 inch height	0.900	2655	38.4
	5	B	Single	MRB-LED-30L-ACR-A-UNV-DIM-30-XX-XX-XX-H 50 inch height	0.900	2011	29.1
	4	C	Single	OPS-SA-05L-4F-UNV-30K8-XX-XX-XX	0.900	5023	34
	1	D1	GROUP	VEGA-02-13-T-40-AA	0.90	N.A.	N.A.
	1	D2	GROUP	VEGA-02-13-T-40-AA	0.90	N.A.	N.A.
	1	D3	GROUP	VEGA-02-13-T-40-AA	0.90	N.A.	N.A.

30 0 15 30

1 inch = 30 feet

N

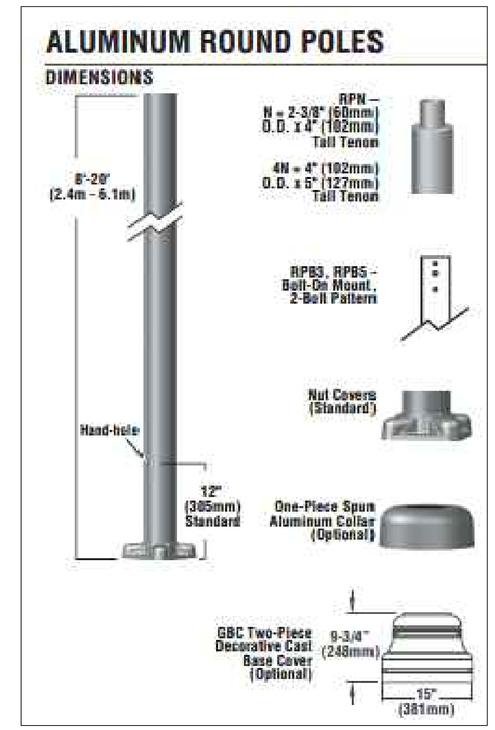

POLE DETAIL

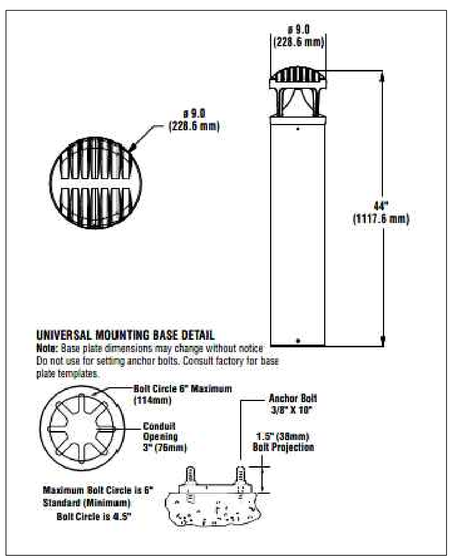

BOLLARD A & B DETAIL

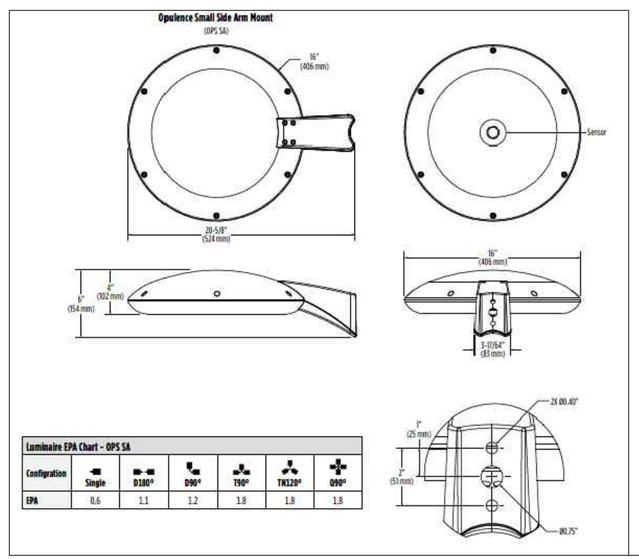

Luminaire EPA Chart - OPS SA						
Configration	Single	D180°	D90°	T90°	TK120°	Q90°
EPA	0.6	1.1	1.2	1.8	1.8	1.8

ARM DETAIL

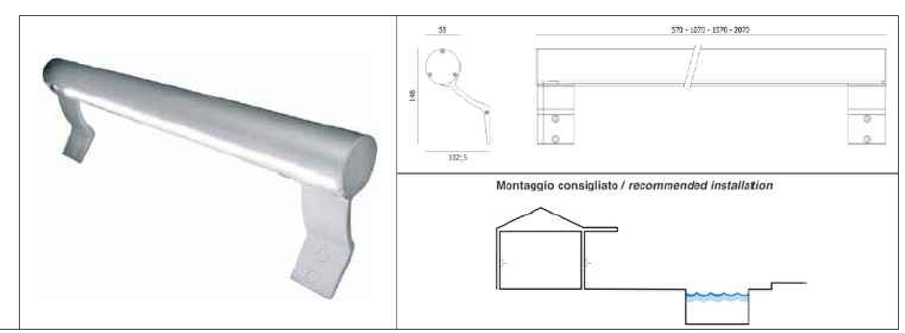

HANDRAIL DETAIL

NO.	REVISION	DATE	BY

UNAUTHORIZED ALTERATION OR ADDITION TO THIS DOCUMENT IS A VIOLATION OF APPLICABLE STATE AND / OR LOCAL LAWS

DRAFT

Creighton Manning
CREIGHTON MANNING ENGINEERING, LLP
145 MAIN ST, 3RD FLOOR, GOSHEN, NEW YORK, 10982
P: (914) 800-9201 F: (518) 445-0397 WWW.CMELLP.COM

10 MULBERRY STREET LIGHTING PLAN
10 MULBERRY ST, RHINEBECK, NY
VILLAGE OF RHINEBECK, DUTCHESS COUNTY

LIGHTING EXHIBIT

DATE: OCT 2023 | CME No.: 123-020 | SCALE: AS NOTED

L1

SHEET NUMBER 1 of

LAST SAVED BY: Aaron Roberts
PLOT DATE: October 13, 2023 3:52 PM
FILE NAME: N:\Projects\2023\123-020 Dutchess Shepherd LLC - Rhinebeck\Working\CADD\Avigraphics\Mulberry Lighting Exhibit.dwg